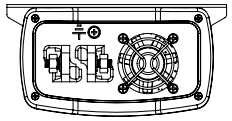

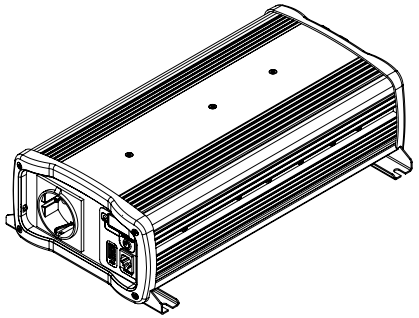

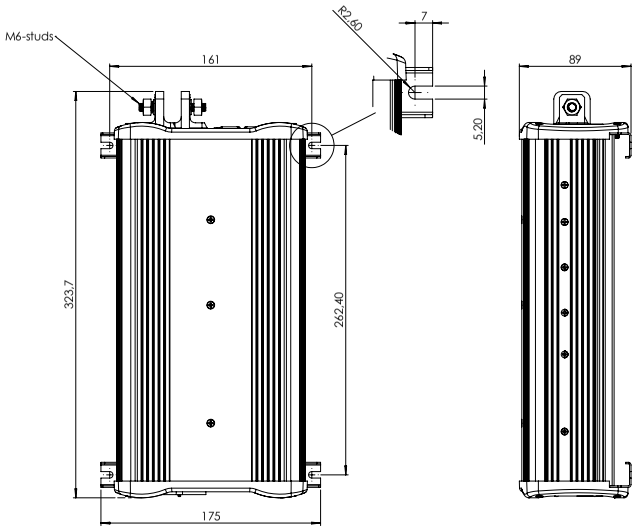


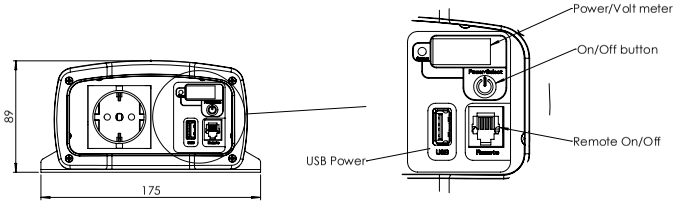


| | | | | | |
|---|---|---|---|---|---|
| UNLESS OTHERWISE SPECIFIED: CHAMFER SHARP EDGES GENERAL TOLERANCE NEN ISO 2768: FORM AND PLACE TOLERANCES NEN ISO 1101 WELDING SYMBOL NEN EN 22553 ROUGHNESS ACC. N NEN3634 | TOLERANCE PRINCIPLE ISO 8015 PROJECTION: THIRD ANGLE UNITS: mm | FINISH: Material: | DO NOT SCALE DRAWING SHEET FORMAT: A2 | Cohisper Power | |
| | NAME / SIGNATURE / DATE | STATUS: | TITLE: WP Sine 12/1000 | | |
| DRAWN: M.R. | 21-12-2012 | | | | |
| CHECK: | | DRAWING: sw1210-eu | ARTICLE NO. | REVISION: - | |
| APPROVE: | 6-2-2013 | Weight 2900.00 gram | SCALE: 1:2 | SHEET 1 OF 1 | |