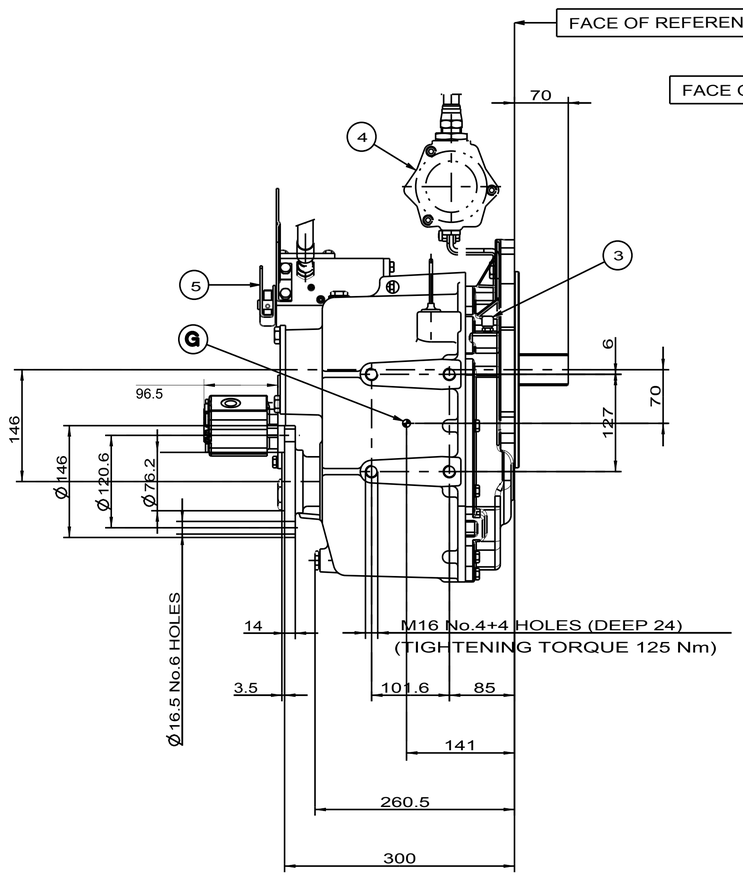

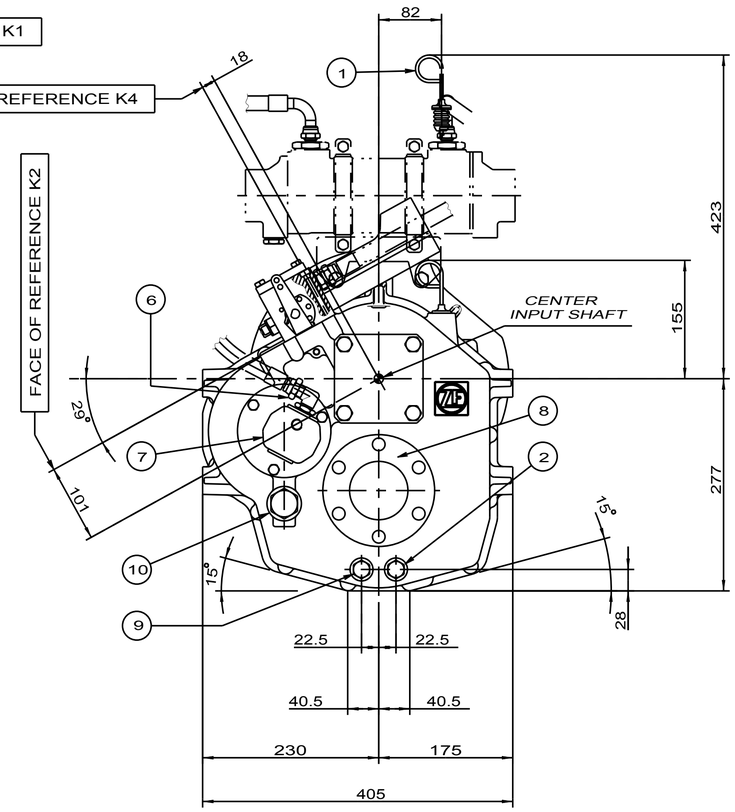

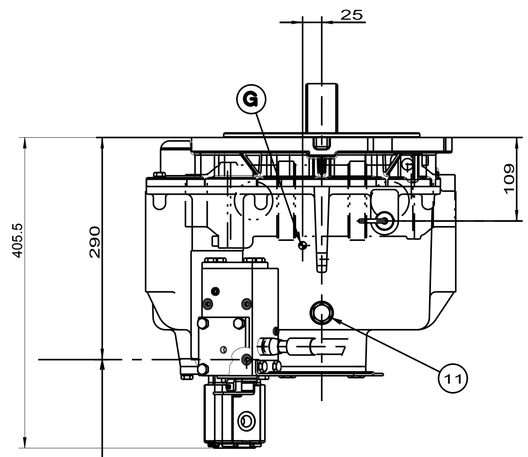

FACE OF REFERENCE K3

OPTIONALS DRAWINGS	DRW. REF.
POWER FLOW AND RATIOS	3207 700 015
DATA FOR TORSIONAL VIBRATION CALCULATION	3207 700 001
CONTROL VALVE - MECHANICAL - MB	3207 600 026
CONTROL VALVE - ELECTRICAL - EB	3207 600 033
TROLLING VALVE - MECHANICAL -	3217 600 030
TROLLING VALVE - ELECTRICAL -	3217 600 037
HEAT EXCHANGER	3215 600 075
LIVE PTO SAE J744 SIZE A	3207 600 024
LIVE PTO SAE J744 SIZE B	3207 600 025
MOUNTING BRACKETS	3207 600 010
FLEXIBLE COUPLING -Centa DS- SAE 2/11.5"	3207 600 021
FLEXIBLE COUPLING -Centa DS- SAE 3/11.5"	3207 600 022
FLEXIBLE COUPLING -Centa DS- SAE 3 CAT/11.5"	3207 600 023
FLEXIBLE COUPLING -Centa R- SAE 3 /11.5"	3207 600 048
FLEXIBLE COUPLING -Vulkardan E- SAE 2/11.5"	3207 600 016
FLEXIBLE COUPLING -Vulkardan E- SAE 3/11.5"	3207 600 017
FLEXIBLE COUPLING -Vulkardan E- SAE 3 CAT/11.5"	3207 600 018
FLEXIBLE COUPLING -Vulkan Torflex- SAE 1/14"	3207 600 041
FLEXIBLE COUPLING -Vulkan Torflex- SAE 2/11.5"	3207 600 037
FLEXIBLE COUPLING -Vulkan Torflex- SAE 3/11.5"	3207 600 036
FLEXIBLE COUPLING -Vulkan Torflex- SAE 3 CAT/11.5"	3207 600 035

G	CENTER OF GRAVITY
11	OIL FILLING PLUG M22x1.5 (TIGHTENNING TORQUE 60 Nm)
10	OIL FILTER COVER
9	OIL DRAIN PLUG M16X1.5 (TIGHTENING TORQUE 40 Nm)
8	OUTPUT FLANGE
7	OIL PUMP
6	OIL PUMP OUTLET TO HEAT EXCHANGER M16X1.5 (TIGHTENING TORQUE 40 Nm) b
5	CONTROL VALVE
4	HEAT EXCHANGER STD. "ZF"
3	OIL BREATHER
2	OIL TEMPERATURE GAUGE CONNECTION M16X1.5 (TIGHTENING TORQUE 40Nm)
1	OIL DIPSTICK
POS	NAME

GEARBOX INSTALLATION DATA		
MASS OF MARINE GEAR BASIC DESIGN WITHOUT OIL	kg	73
OIL CAPACITY	dm^3	4÷5
OPERATING PRESSURE AT 1500 rpm	bar	23÷24
LUBRICATION PRESSURE	bar	>=0.2
MAX. INCLINATION DURING OPERATION - TRANSVERSE -	deg	± 15°
MAX. INCLINATION DURING OPERATION - LONGITUDINAL -	deg	+25°-10°
GEARBOX COOLING DESIGN DATA		
POWER LOSSES PERCENTAGE	%	3
OIL FLOW RATE AT 1500 rpm	dm^3	12
MAX. OIL TEMPERATURE	°C	85
MIN. OPERATING OIL TEMPERATURE SUGGESTED	°C	40
MAX. OIL PRESSURE ALLOWABLE	bar	25

b

FOR GEARBOXES TYPE:

ZF 280-1

Ind	Qty	Mod.No.	Date	Name
b		Z%45211	16.06.09	PINATO
a		24036	13.07.04	FORNOLI

Modification

Data	16-10-07	-	-	-	-	-	-	MONTI	-	b1
Nome	MONTI	---	---	---	---	---	-	-	-	-
	Dis.tore Drawn	Prog.sta Design	Manager Funct.	G.D.T. Stand.	U.T.O. Prod.	Dentature Teeth	Data Modif. mod.date	Nome Name	N.Modifica Mod.No.	Vers.Doc. Doc.Vers.

Questo disegno non può essere copiato o dato a terze persone senza la nostra autorizzazione
Questo progetto è di nostra proprietà

This document may not be copied or disclosed to third persons without permission of ZF.
We are the owner of this design.

ZF Padova S.r.l.

Informazioni Tecniche
Technical information
ZF280-1

Descrizione
Description
DISEGNO DI INSTALLAZIONE
DISEGNO DI INSTALLAZIONE

Massa
Mass
- kg

N.Disegno Simile
Similar docu. no.

Sistema CAD
CAD system
PRO/E

Codice Grezzo
Casting/forging No.

Foglio
Sheet
1 di *of* 1

Codice Materiale
Item number

Scala
Scale
1:4

N. Disegno
Document number
3207_602_003_INS001

DIN
A1

model name: MODEL NAME [DRAFT]